Supplied By:
TRENCHDRAIN SUPPLY
877-903-7246
www.trenchdrainsupply.com

R-3246-CL
Combination Inlet Frame, Grate, Curb Box

Heavy Duty

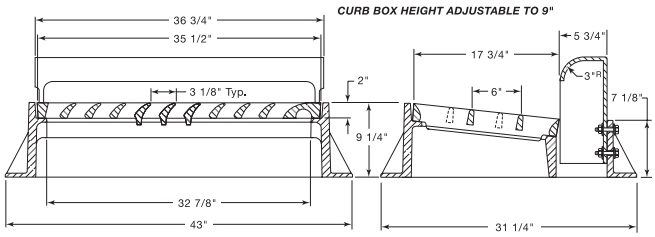

CATALOG NUMBER	GRATE TYPE	SQ. FT. OPEN	WEIR PERIMETER LINEAL FEET
R-3246-CL	L	1.6	5.8
R-3246-CL	C	2.1	5.8

Standard Grate (shown): Type L
Also available with grate Type C.

Type C

R-3246-E
Combination Inlet Frame, Grate, Mountable Curb Box

Heavy Duty

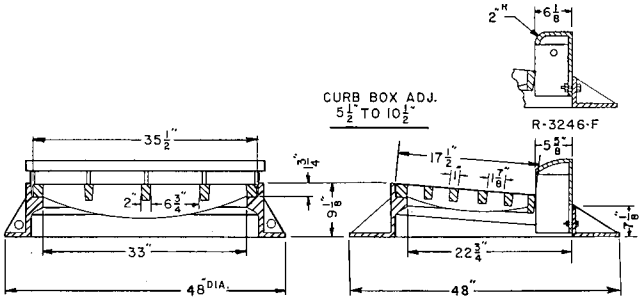

CATALOG NUMBER	GRATE TYPE	SQ. FT. OPEN	WEIR PERIMETER LINEAL FEET
R-3246-E	C	1.6	5.8

Also available with 2" radius curb box, order **R-3246-F**.

R-3247-2D
Combination Inlet Frame, Grates, Curb Box

Heavy Duty

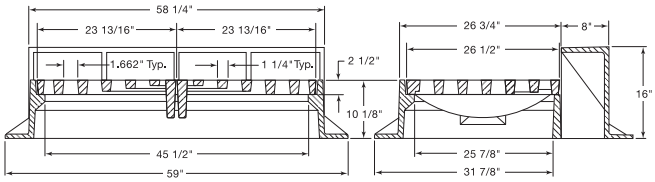

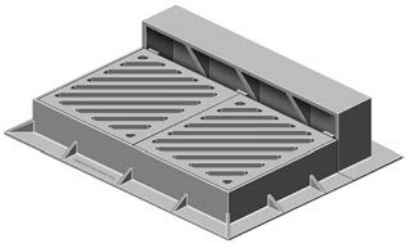

CATALOG NUMBER	GRATE TYPE	SQ. FT. OPEN	WEIR PERIMETER LINEAL FEET
R-3247-2D	R	3.8	8.4
R-3247-2L	L	4.6	8.4
R-3247-2Q	Q	1.8	8.4

Standard Grate (shown): Type R

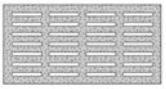
Type Q

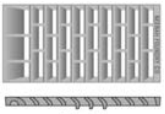
Type L

Can be furnished without curb box, see **R-3572** and **R-3573** series.
Available with 2-piece Type Q grate, order **R-3247-2Q**.
Available with 2-piece Type L grate, order **R-3247-2L**.

CLICK HERE to return to the Table of Contents